KENWOOD

SIRIUS

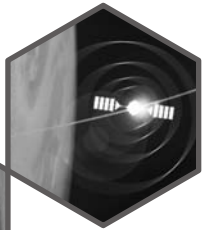

Here2Anywhere™

KPA-H2H
Home Docking Kit
Installation Guide

Box contents

Unpack your KPA-H2H kit carefully and make sure that everything listed here is present:

1 x Cradle

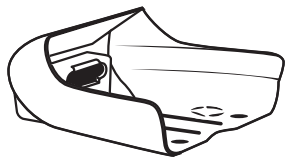

1 x Base

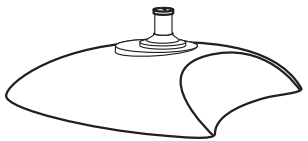

1 x Antenna

1 x Power Supply

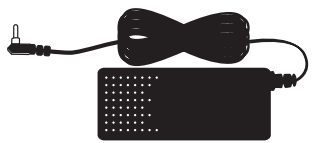

1 x AC Cord

1 x Audio Cable

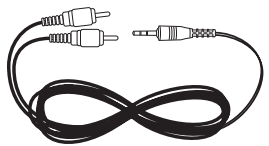

1 x Hardware Bag

If anything is missing or damaged, or if your KPA-H2H fails to operate, notify your dealer immediately. If your KPA-H2H was shipped to you directly, notify your shipper immediately. Kenwood recommends that you retain the original carton and packing materials in case you need to ship your KPA-H2H in the future.

Safety precautions

⚠ Caution

Take the following precautions to keep the unit in proper working order:

- Installation must be performed according to this installation manual. Kenwood is not responsible for issues arising from installations not performed according to the procedures in this manual.
- Use only the included power supply.
- Do not install the unit where it will be exposed to high levels of humidity, moisture, or dust.

NOTE

Use of the included antenna inside a home requires placement at a North-, West-, or East-facing window (depending on where you live). If a proper window location is not available, the antenna must be placed outside the home, away from any overhead obstructions. See pg. 6, step 5 for details.

Installation in a home

Note: Do not put Here$_2$Anywhere in the docking station until you have completed the installation.

1. Using the provided screw, assemble the docking station cradle to the base.

2A. Plug the audio cable's mini connector into the back of the docking station, as shown.

2B. Plug the audio cable's white (L ch,) and red (R ch.) connectors into your audio system.

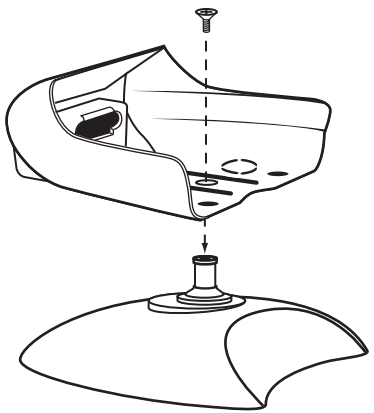

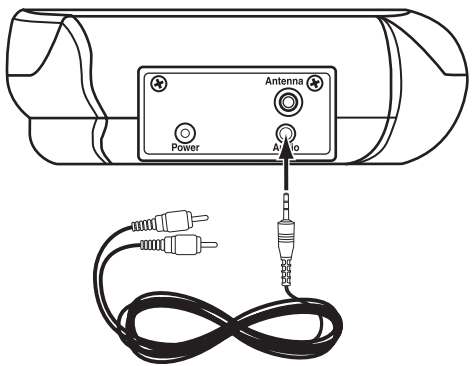

Installation in a home (continued)

3. Plug the AC cord into the power supply, then plug the power supply into the back of the docking station, as shown. Don't plug the AC cord into a wall outlet until the installation is completed.

4. Plug the antenna into the back of the docking station until it is firmly seated, as shown.

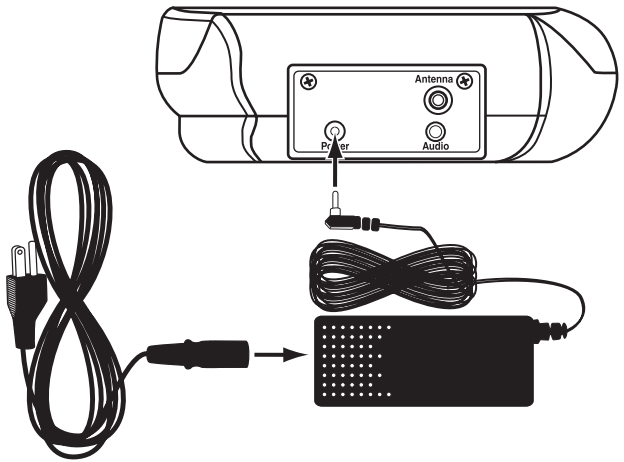

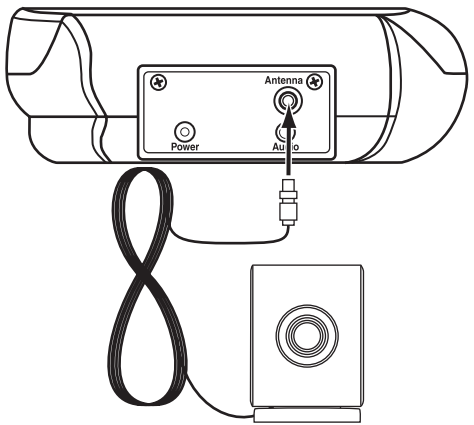

Installation in a home: Placing the antenna

5. For best reception of the satellite signal, place the included antenna near a window. Use the map on page 7 as a general placement guideline—some experimentation may be needed to obtain the best results. Due to the paths of the SIRIUS satellites over the US, the best window for the antenna in your home depends on where you live. Locate the antenna based on which section of the country you live in according to the map on page 7.

Section 1: Place the antenna at an *EAST-FACING window*

Section 2: Place the antenna *OUTSIDE, away from any overhead obstructions*

Section 3: Place the antenna at a *WEST-FACING window*

Section 4: Place the antenna at a *NORTH- or EAST-FACING window*

Section 5: Place the antenna at a *NORTH-FACING window*

Section 6: Place the antenna at a *WEST- or NORTH-FACING window*

- In major US cities, you may also be able to receive the signal from SIRIUS ground repeaters, which may allow you to place the antenna away from a window.
- No matter where you live, since the antenna is weather-proof you can also locate it outside, clear of any overhead obstructions. (This is especially important if your house has an extended roof or extended window frame structures.)

Using the Antenna Signal Screen

This screen shows the quality of the SIRIUS satellite signal that's being received, to help you find the best location for the antenna.

1. Enter the Setup Mode by holding the POWER button for at least 1 second, then press the left or right arrow button until the Antenna Signal screen appears (*below*):

After a few seconds the signal quality bars will indicate how well the antenna is receiving the SIRIUS satellite signal.

2. Find a location for the antenna that illuminates the maximum number of bars.
   - After moving the antenna, wait at least 2 seconds before moving it again, to enable the unit to process the signal.

3. Due to the moving paths of the SIRIUS satellites, it is possible for the signal to change over time. In most cases, signal should be available continuously, however, it may be temporarily blocked in some antenna locations in home installations. Be sure to check the the Antenna Signal screen if there is a loss of signal or audio. Experimentation with antenna placement in the home or outside may be necessary to ensure continuous reception.

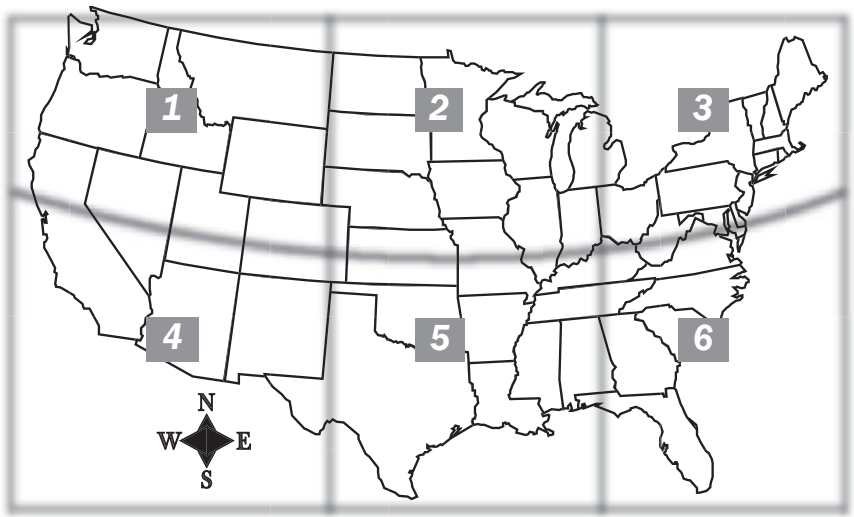

KENWOOD

www.kenwoodusa.com

www.kenwoodusa.com/inquiry

1-800-KENWOOD

Main Office
P.O. Box 22745
Long Beach, CA 90801-5745

©2003 Kenwood USA Corporation.
All Rights Reserved.

0022-0403-H2H INST